HIRSCHMANN
A BELDEN BRAND

Product information
GDM 3009 J schwarz/black

Industrial Connecting Solutions:Rectangular Connectors:Valve Connectors (Type A -B -C):Type A:Field Attachable Valve Connectors:Valve Connectors (DIN EN 175 301-803):GDM 3009 J schwarz/black

http://e-catalog.hirschmann.com/link/57078-24228-256261-256266-256270-276215-24311-34890/en/conf/uistate

Name	GDM 3009 J schwarz/black
	cable socket with central screw M 3 x 35
Delivery informations	
Availability	available
Product description	
Description	cable socket with central screw M 3 x 35
Type	GDM 3009 J schwarz/black
Order No.	932 214-100
Number of contacts	3 + PE
Cable gland	PG 9
Conductor size	max. 1.5 mm²
Standard	DIN EN 175 301-803-A
Housing Color	black
Construction type	A
Technical data	
Pin dimensions	6.3 mm x 0.8 mm, 4.8 mm x 0.8 mm
Rated voltage	AC/DC 250 V
Rated current	16 A
Contact resistance	<= 4 mOhm
Type of termination	screw / cable shoe / cable eye
Suitable cables	4.5 mm to 7 mm diameter
Mounting	central nut
Material	
Contact surface material	Sn
Contact bearer material	PA
Housing material	PA
Environmental conditions	
Protection class (IEC 60529)	IP 65 (gasket necessary)
Pollution severity	3
Temperature range	-40 °C to +125 °C
Inflammability class	
Housing	94 HB
Contact bearer	94 V0
Approvals	
UR	UR
VDE	VDE
SEV	SEV
CSA	CSA
Packing unit	
Packaging unit	200 pieces
Scope of delivery and accessories	
Accessories to order separately	(NBR) flat gasket GDM 3-7, Order no. 730 801-002; (EPDM) flat gasket GDM 3-21, Order no. 731 739-004; profiled gasket GDM 3-16, Order no. 731 531-002; knurled screw GDM 3011-8, Order no. 732 574-001; stainless steel screw GDM 3011 RF-1, Order no. 734 363-001

Industrial Connecting Solutions:Rectangular Connectors:Valve Connectors (Type A -B -C):Type A:Field Attachable Valve Connectors:Valve Connectors (DIN EN 175 301-803):GDM 3009 J schwarz/black

http://e-catalog.hirschmann.com/link/57078-24228-256261-256266-256270-276215-24311-34890/en/conf/uistate

Picture

Drawing

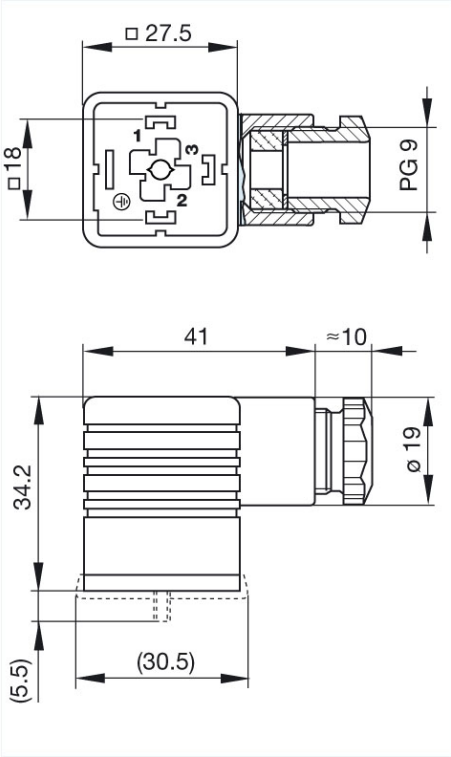

Belden Deutschland GmbH
Im Gewerbepark 2
58579 Schalksmühle
Germany
Phone: +49 7127/14-1806
E-Mail: icos-sales@belden.com

The information published in the websites has been compiled as carefully as possible. It is subject to alteration without notice in technical as well as in price-related/commercial respect.
The complete information and data were available on user documentation. Mandatory information can only be obtained by a concrete query.